

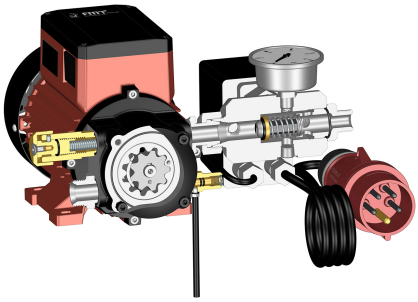

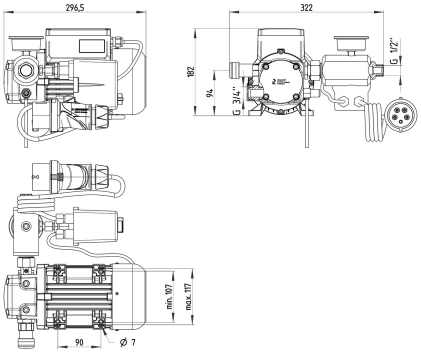

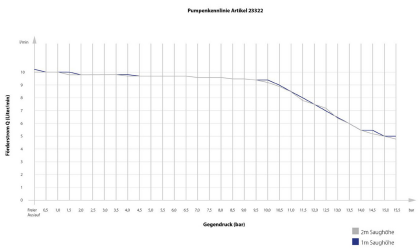

Internal gear oil pump 10 l/min

DRST-400 V-3~AC-50 Hz-0,84 kW

Item number:	23 322
EAN:	4103810233227
Discount group:	D

Technical data

Connecting cable, length (m):	1,8
Connection suction side:	G 3/4" male thread (both sides)
Connection discharge side:	G 1/2" male
Hydraulic data	
Pump design:	gearwheel pump, selfpriming
Delivery rate under free discharge (l/min):	10
Suction height (m):	3,5
Discharge pressure up to (bar):	16
Flow media:	oils up to SAE 90
Motor data	
Voltage (V):	400
Frequency (Hz):	50
Power consumption (A):	2,2
Power (kW):	0,84
Thermal protection:	self resetting
Duty cycle (min):	continuous operation – a real endurance runner
Torque (Nm):	3,5
Rotation speed (rpm):	1450
Type of construction:	IMB 3
Safety class:	IP66
Dimensions LxWxH (mm):	310 x 320 x 205
Weight (kg):	11,8

Specification

- On-off switch, diaphragm switch (85 004)
- Adjustable by-pass (pre-set at 7 bar)
- With venting valve
- Acc. to TRBF

Special notes

- Internal gear pump with corrugated filling part. This construction effects:
- Marginal inhomogeneous grade of volume flow rate
- Low noise level
- Compact construction
- The longer tooth engagement provides an improved seal effect and a better suction and discharge angle
- Optimal suction characteristics
- Pump for tank and wall mounting
- Pump is designed for use in conjunction with pipe lines up to 70 meters, depending on cross section of pipe line
- Recommended accessories for wall mounting:
- (19 512) and (19 522), (19 523), (19 523 001)

Packaging

Dimensions LxWxH (mm):	380 x 360 x 250

Weight (kg):	12,4
Packing unit:	1,0